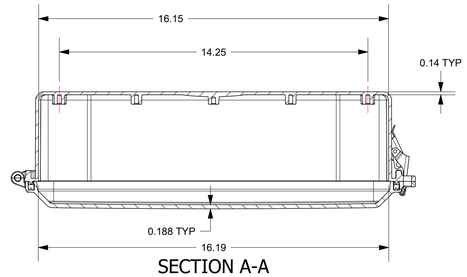

SECTION A-A

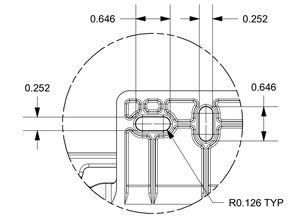

DETAIL C
(4x)

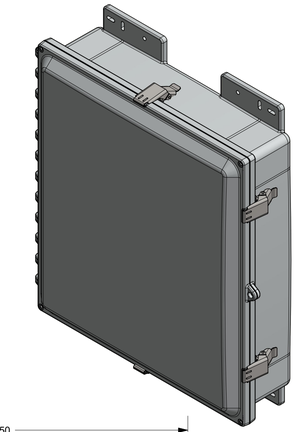

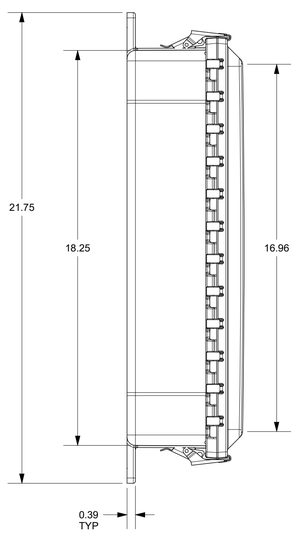

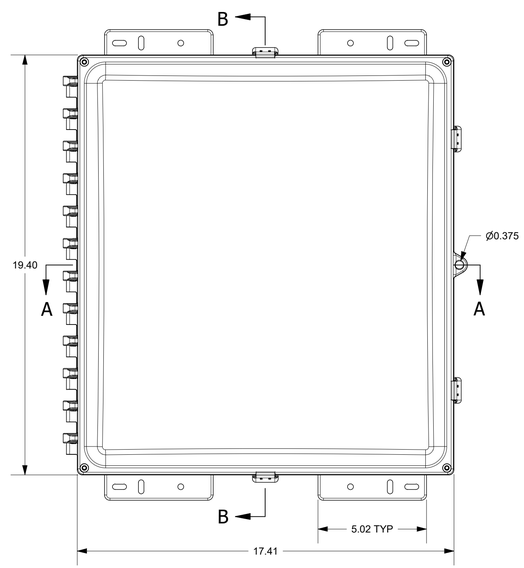

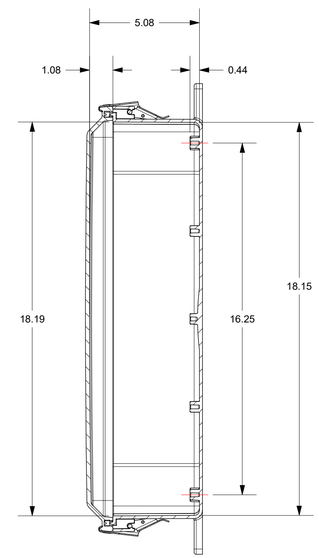

SECTION B-B

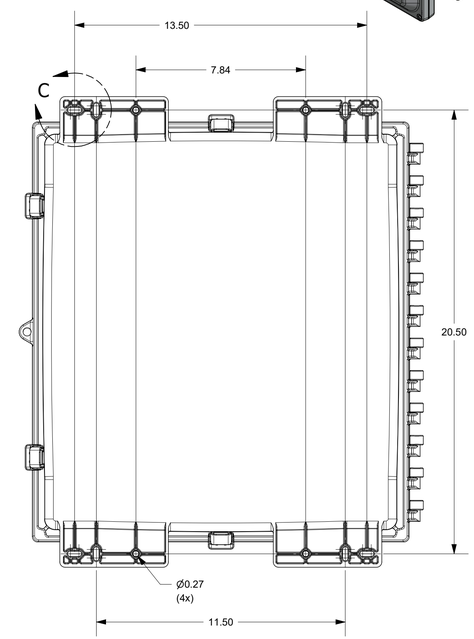

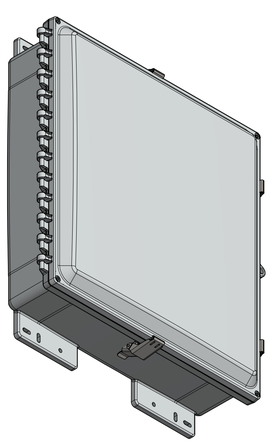

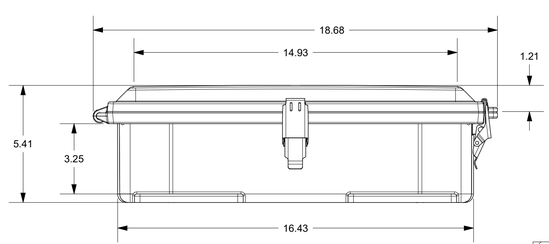

SPECIAL REQUIREMENTS

ASSEMBLY:

1. (1) POLYCARBONATE ACCESSORY KIT WITHOUT MOUNTING FEET (WPPCACCKITNOFT) SHALL BE PACKAGED LOOSELY INSIDE ENCLOSURE
   HARDWARE INCLUDED:
   - -(4) #10-32 x 5/8 PAN HEAD PHILLIPS MACHINE SCREW (RMSC10/32X5/8SS)
   - -(4) #10-32 x 3/8 PAN HEAD SCREW (RMSC10/32X3/8ZN)
   - -(4) #10 WASHER (RMWAS10ZN)
2. (1) STYROFOAM SHEET SHALL BE PLACED ON TOP OF COVER INSIDE CARTON

THIS DRAWING IS THE SOLE AND EXCLUSIVE PROPERTY OF ROBROY ENCLOSURES. NO PART OF THIS DRAWING MAY BE REPRODUCED, DISTRIBUTED, OR PUBLICALLY DISPLAYED IN ANY FORM OR BY ANY MEANS WITHOUT THE EXPRESS WRITTEN PERMISSION OF ROBROY ENCLOSURES. ALL RIGHTS RESERVED UNDER THE COPYRIGHT LAWS. COPYRIGHT © 2020 ROBROY ENCLOSURES

NEMA 250: TYPE 1, 3R, 4, 4X, 12
IEC 60529: IP66
COLOR: N/A
COLOR STANDARD: PANTONE 7541 C

STANDARD P/N: PC181604SS
CUSTOMER DWG:

ALL DIMENSIONS ARE IN INCHES UNLESS OTHERWISE SPECIFIED

TOLERANCES UNLESS SPECIFIED	.XX	.XXX
	± 0.03	± 0.010

MATERIAL: POLYCARBONATE

REVISION HISTORY

REV	DESCRIPTION	DATE	ENG
-	-	-	-
-	-	-	-
-	-	-	-
-	-	-	-
-	-	-	-
-	-	-	-

STAHLIN
A ROBROY ENCLOSURES™ BRAND

Robroy Enclosures
500 Maple Street
Belding, Michigan 48809
Phone: 616-794-0700
Fax: 616-749-3378

DRAWN BY	DATE	CUSTOMER	DWG
BH	9/21/2020		PC181604SS
SCALE		DESCRIPTION	PART NUMBER
DO NOT SCALE		STANDARD ENCLOSURE	FEPC181604SS