Parts List				Parts List			
ITEM	QTY	PART NUMBER	DESCRIPTION	ITEM	QTY	PART NUMBER	DESCRIPTION
1	1 EA	FE4PKBPN	SCREW PACK	9	1 EA	RMINSTG	GROUNDING INSTRUCTIONS
2	1 EA	RMCTN302412	PACKAGING	10	1 EA	RMLAB508	UL LABEL
3	1 EA	RMCTN302412INS	PACKAGING	11	1 EA	WPN302414BOND	FIBERGLASS BASE & SIDEWALL BONDED
4	4 EA	RMCTN3X1.5X12	CORNER POSTS	12	1 EA	WPC30240VR	FIBERGLASS COVER
5	5 EA	RMEMKWKN	WING KNOB QUATER TURN LATCHES	13	15 EA	RMRIV48	48 RIVET
6	1 EA	RMHASPNGG	HASP PIN	14	1 EA	RMSC1/4-20X1/2HHCS	SCREW FOR HASP PIN
7	3 EA	RMHINGNFEMALEGG	FEMALE FIBERGLASS HINGE	15	9 EA	RMWAS3/8X1/8X062	WASHERS
8	3 EA	RMHINGENMALEGG	MALE FIBERGLASS HINGE				

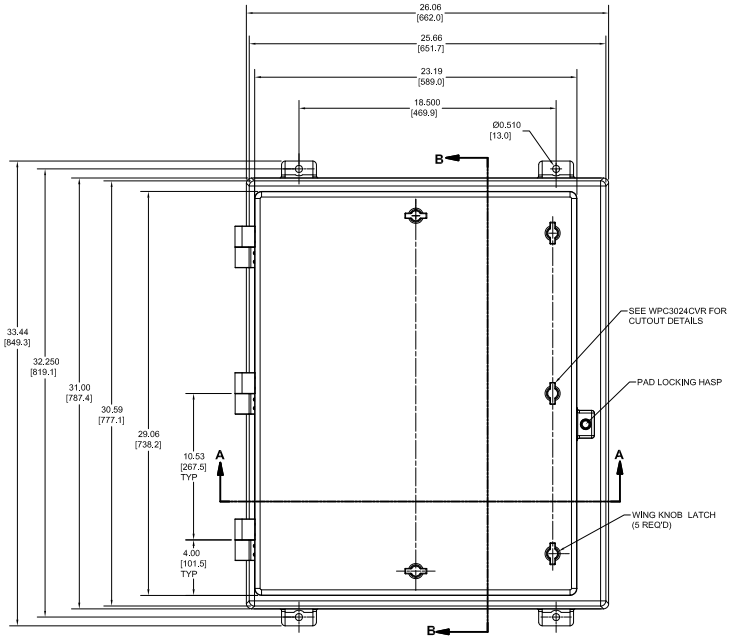

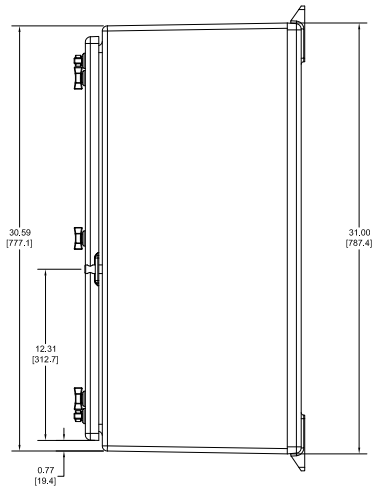

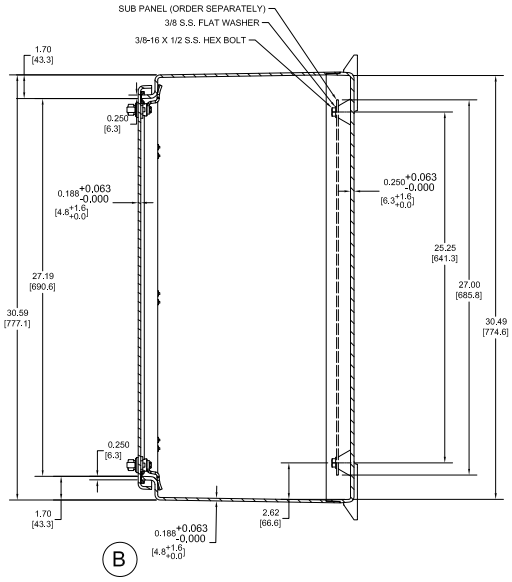

SECTION B-B

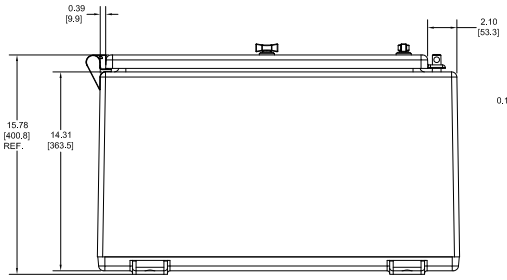

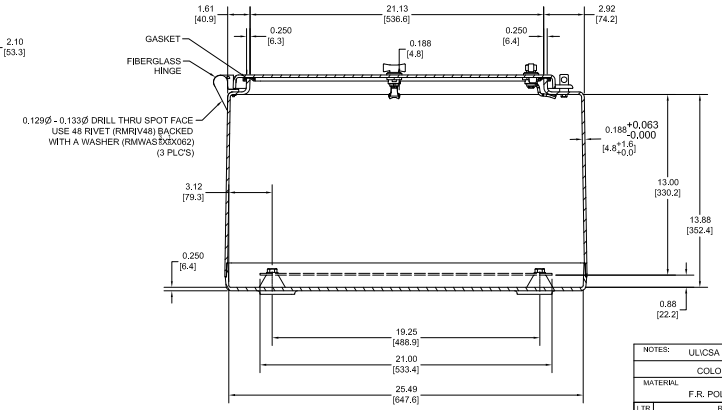

SECTION A-A

INSTALLATION OF QUATER-TURN LATCHES.

1) USE ONLY CERTIFIED QUARTER-TURN ASSEMBLIES. CERTIFIED ASSEMBLIES MUST BE MARKED ON THE CAM FOR TORQUE VERIFICATION.
2) INSTALL QUARTER-TURN INTO MOUNTING HOLE CORRECT ORIENTATION.
3) OPERATOR #1 TO TORQUE HOUSING NUT TO 70 IN/LBS WITH BREAKING TORQUE WRENCH.
4) OPERATOR #1 IS TO MARK COVER VERIFYING THAT HOUSING NUT HAS BEEN TORQUED TO 70 IN/LBS.
5) OPERATOR #2 IS TO VERIFY HOUSING NUT TORQUE IS 70 IN/LBS WITH BREAKING TORQUE WRENCH.
6) OPERATOR #2 APPLIES SILICONE ACROSS THREADS OF THE HOUSING AND ON TO HOUSING NUT.
7) VERIFY DIRECTION OF TURN IS CLOCKWISE TO LOCKING (CLOSED) POSITION.
8) LOCK ALL QUATER-TURNS IN CLOSED POSITION BEFORE SHIPPING.

HOUSING NUT TOLERANCE: 65 TO 75 IN/LBS
CAM NUT TOLERANCE: 16 TO 18 IN/LBS

NOTES: UL/CSA TYPE 1, 3, 3R, 4X, 12
COLOR GLACIER GRAY RR3013

MATERIAL: F.R. POLYESTER FIBERGLASS

DR. BY: DEVI — DATE: 9/22/2008

LTR	REVISION RECORD	DATE	BY	CHD
A	ADDED BILL OF MATERIAL	8/4/2011	SL	-
B	ADDED TOLERANCE TO WALL THICKNESS	8/31/2011	SL	-
-	-	-	-	-
-	-	-	-	-
-	-	-	-	-

CHK. BY — DATE
APD. BY — DATE

SCALE: DO NOT SCALE

ALL DIMENSIONS ARE INCHES (MILLIMETERS) UNLESS SPECIFIED

TOLERANCES UNLESS SPECIFIED: .XX ± 0.03(0.79), .XXX ± 0.010 (0.25)

STAHLIN ENCLOSURES
DIVISION OF ROBROY INDUSTRIES

BELDING, MICHIGAN 48809

CUSTOMER

SHT 1 OF 2

PART NAME: ENCLOSURE

PART NO.: N302414FHLWT

THIS DRAWING AND THE INFORMATION HEREON ARE OUR PROPERTY AND MAY BE USED BY OTHERS ONLY AS AUTHORIZED BY STAHLIN ENCLOSURES. ALL RIGHTS ROBROY INDUSTRIES ALL RIGHTS RESERVED UNDER THE COPYRIGHT LAWS