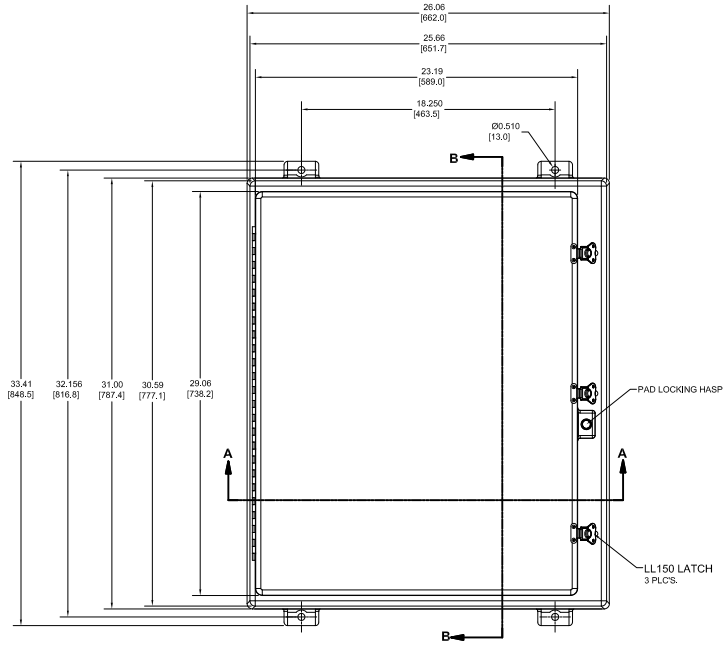

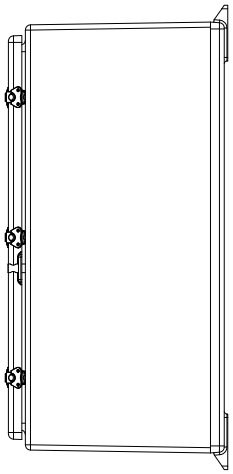

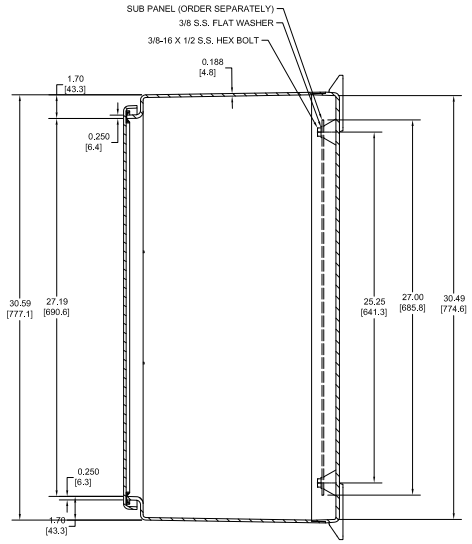

SECTION B-B

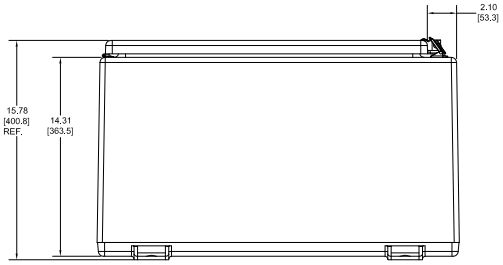

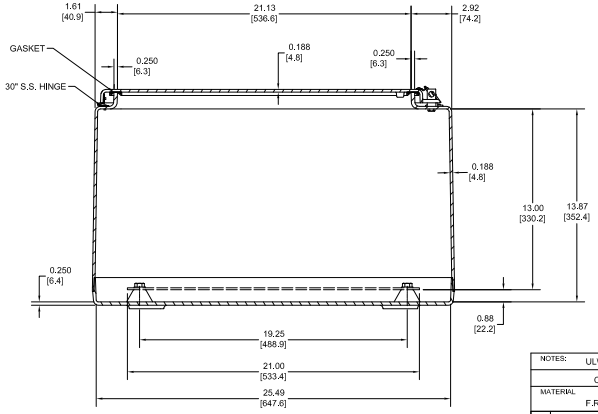

SECTION A-A

NOTES:	UL/CSA TYPE 1, 3, 3R, 4X, 12					ALL DIMENSIONS ARE INCHES (MILLIMETERS) UNLESS SPECIFIED	TOLERANCES UNLESS SPECIFIED .XX ± 0.03(0.79) .XXX ± 0.010 (0.25)
	COLOR GLACIER GRAY RR3013						
MATERIAL	F.R. POLYESTER FIBERGLASS			DR. BY DEVI	DATE 9/19/2008	STAHLIN ENCLOSURES DIVISION OF ROBROY INDUSTRIES	BELDING, MICHIGAN 48809
LTR	REVISION RECORD	DATE	BY	CHK. BY	DATE		
-	-	-	-	APD. BY	DATE	CUSTOMER	SHT 1 OF 2
-	-	-	-				
-	-	-	-				
-	-	-	-	SCALE DO NOT SCALE		PART NAME ENCLOSURE	PART NO. N302414
-	-	-	-				

THIS DRAWING AND THE INFORMATION HEREON ARE OUR PROPERTY AND MAY BE USED BY OTHERS ONLY AS AUTHORIZED BY STAHLIN ENCLOSURES, A DIVISION OF ROBROY INDUSTRIES. ALL RIGHTS RESERVED UNDER THE COPYRIGHT LAWS