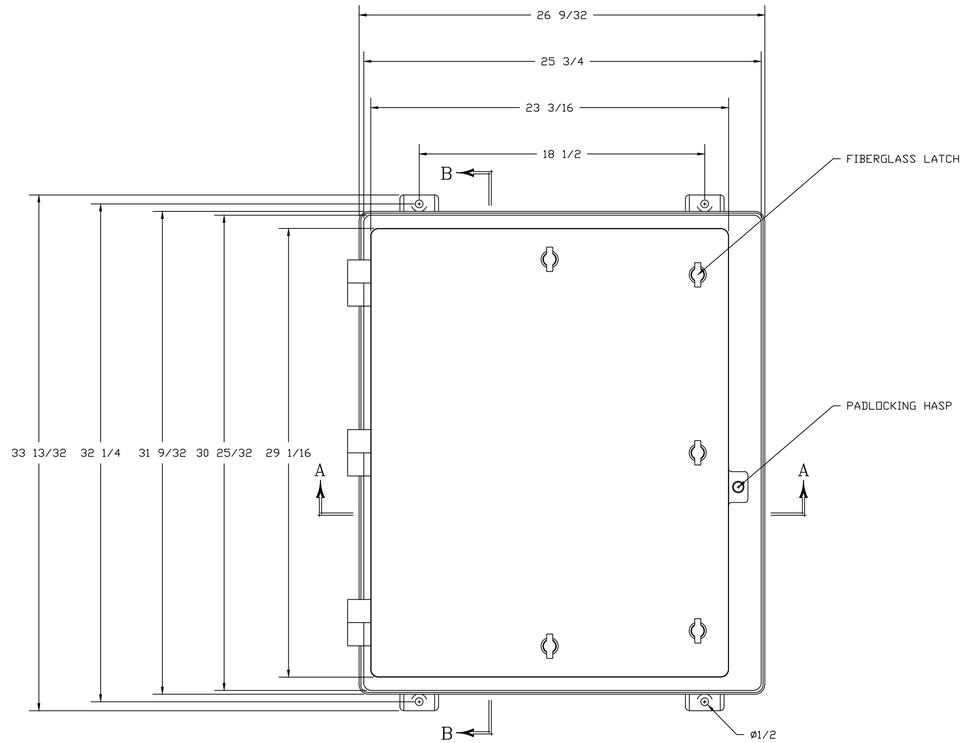

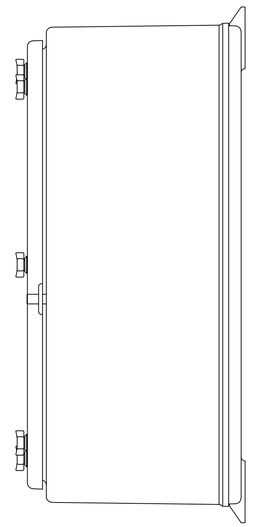

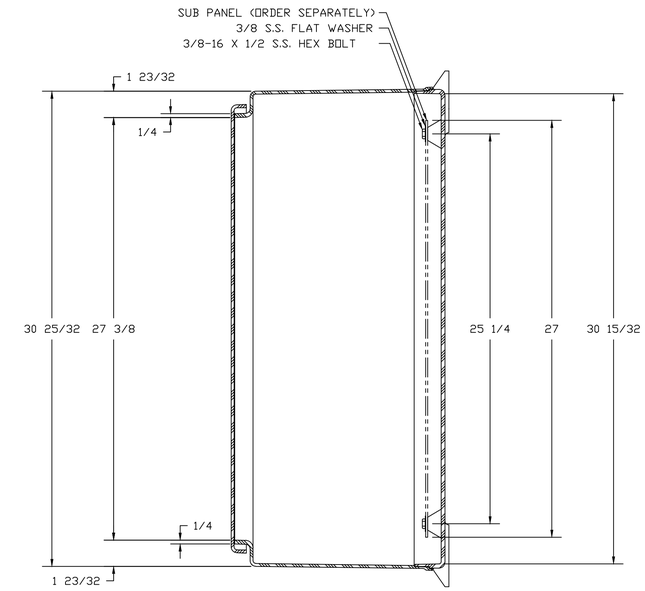

SECTION B–B

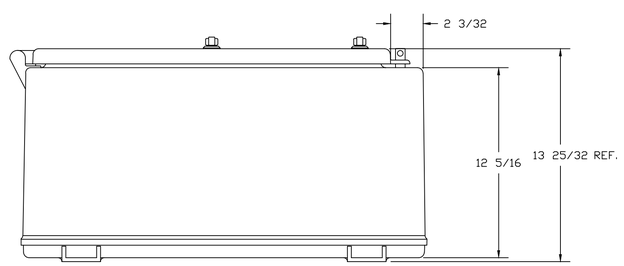

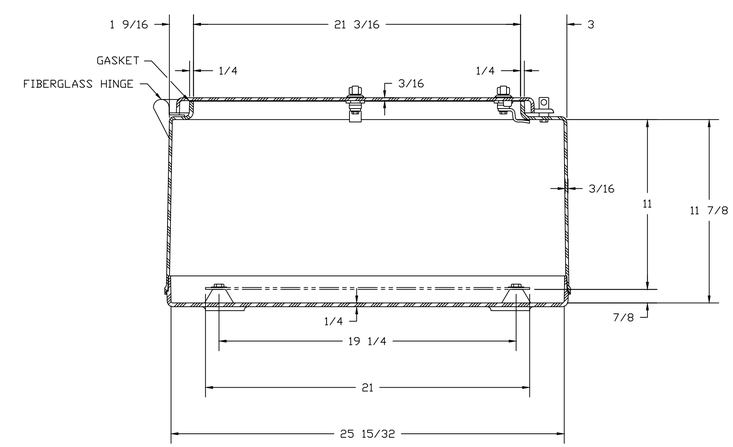

SECTION A–A

NOTES:

NEMA 4X

COLOR GLACIER GRAY RR1013

MATERIAL: F.R. POLYESTER FIBERGLASS

LET.	REVISION RECORD	DATE	BY	CHD.

DR. BY	SH	DATE 04/28/92
CHK. BY		DATE
APD. BY		DATE
SCALE DO NOT SCALE		

STAHLIN ENCLOSURES
DIVISION OF ROBROY INDUSTRIES

BELDING, MICHIGAN 48809

TOLERANCES UNLESS SPECIFIED	DECIMAL	FRACTIONAL
	± .010	± 1/32

CUSTOMER

AutoCAD DWG. FILE: N302412FHLWT

PART NAME: ENCLOSURE

PART NO. N302412FHLWT