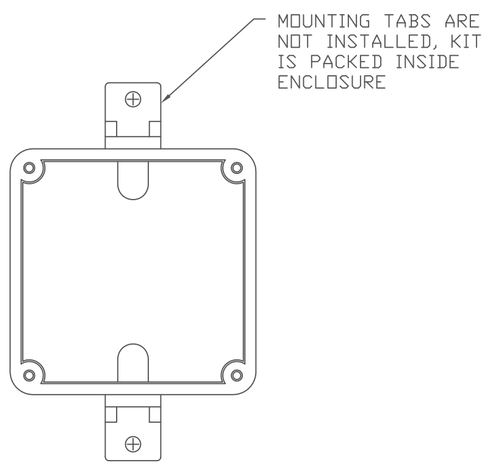

TOP VIEW
WITHOUT COVER

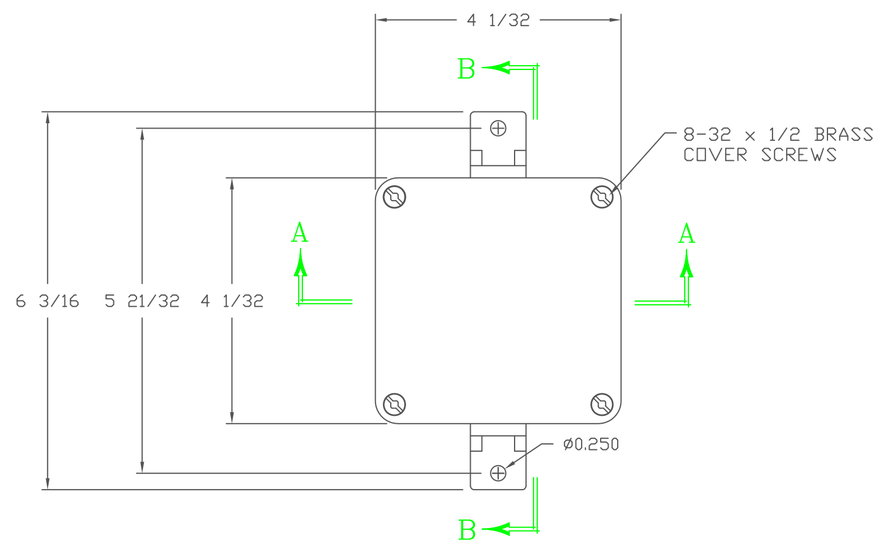

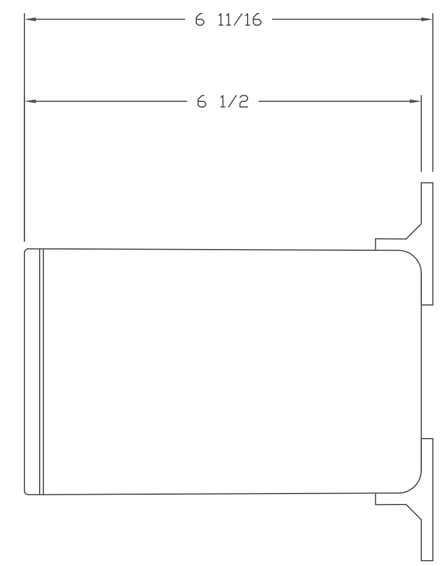

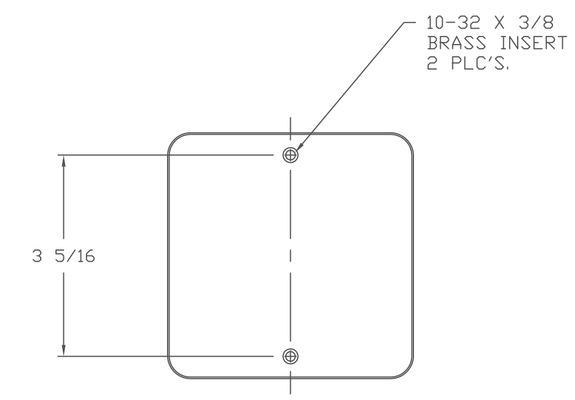

BACK VIEW
WITHOUT MOUNTING TABS

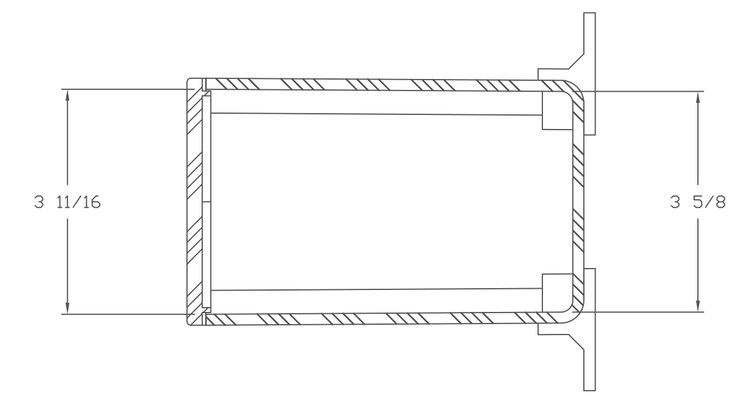

SECTION A-A

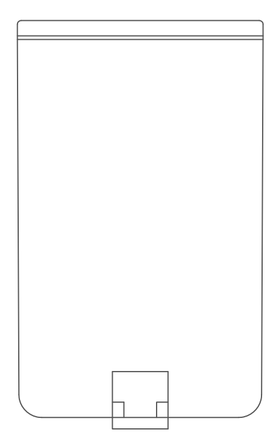

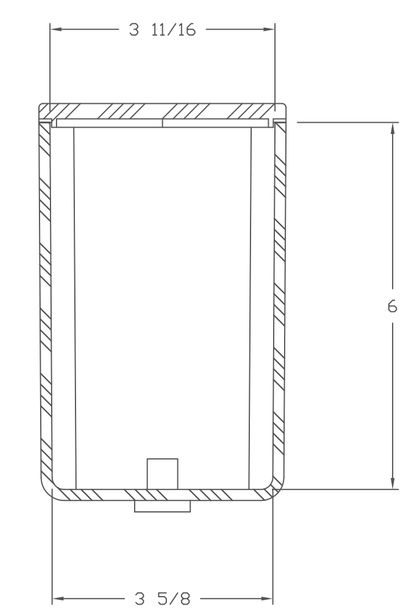

SECTION B-B

NOTES:

COLOR GRAY

TOLERANCES UNLESS SPECIFIED: DECIMAL ± .010 FRACTIONAL ± 1/32

MATERIAL: PVC

DR. BY: GF DATE: 3/22/00

CHK. BY DATE

APD. BY DATE

SCALE: DO NOT SCALE

LET.	REVISION RECORD	DATE	BY	CHD.

STAHLIN ENCLOSURES
DIVISION OF ROBROY INDUSTRIES

BELDING,MICHIGAN 48809

CUSTOMER

AutoCAD DWG. FILE: J446PVC

PART NAME: ENCLOSURE

PART NO.: J446PVC