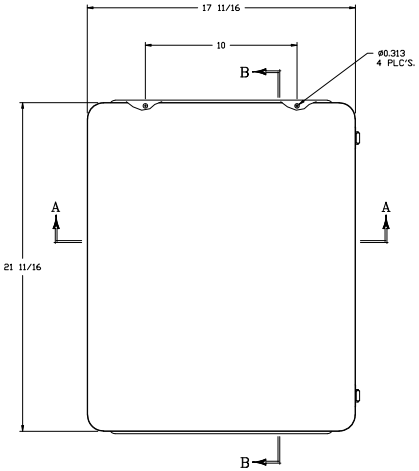

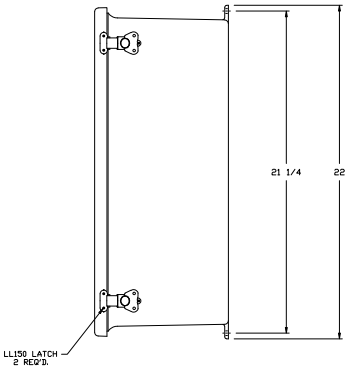

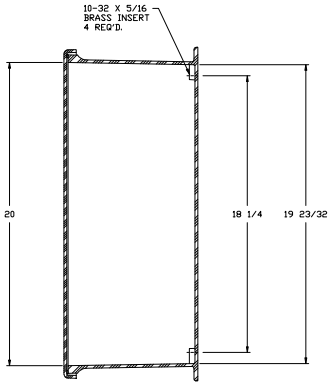

SECTION B-B

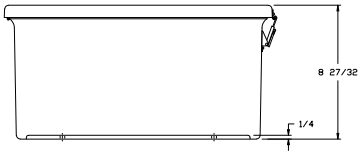

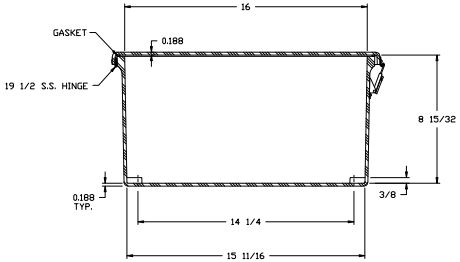

SECTION A-A

NOTES:

NEMA 4X

COLOR GLACIER GRAY RR1013

MATERIAL

F.R. POLYESTER FIBERGLASS

LET.	REVISION RECORD	DATE	BY	CHD.

DR. BY	GF
DATE	3/30/00
CHK. BY	
DATE	
APD. BY	
DATE	
SCALE	DO NOT SCALE

TOLERANCES UNLESS SPECIFIED

DECIMAL	FRACTIONAL
±.010	± 1/32

STAHLIN ENCLOSURES
DIVISION OF HOFFMAN INDUSTRIES

BELDING,MICHIGAN
48809

CUSTOMER

AutoCAD DWG FILE

PART NAME: ENCLOSURE

PART NO.: J2016HLL