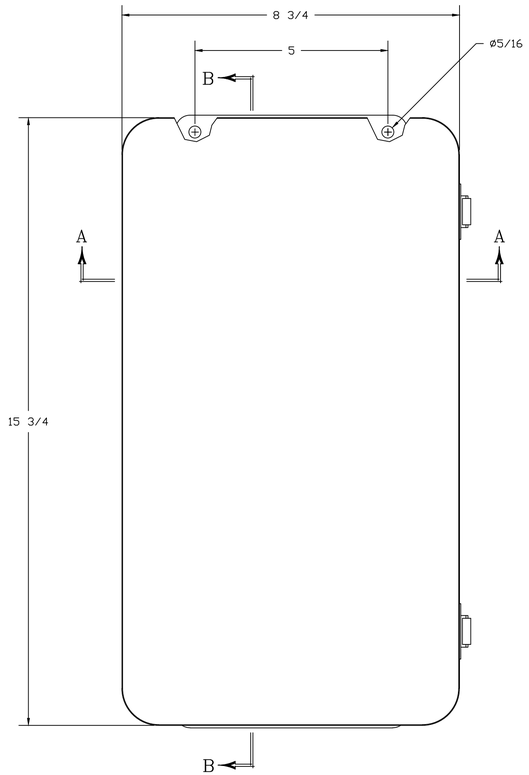


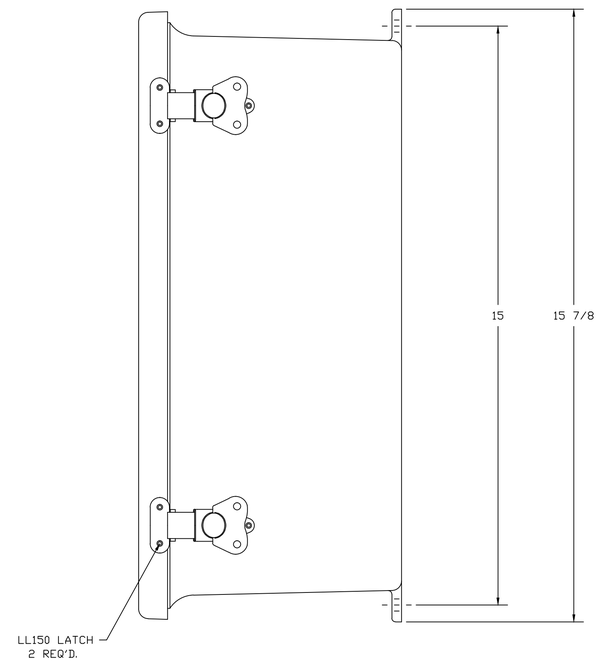


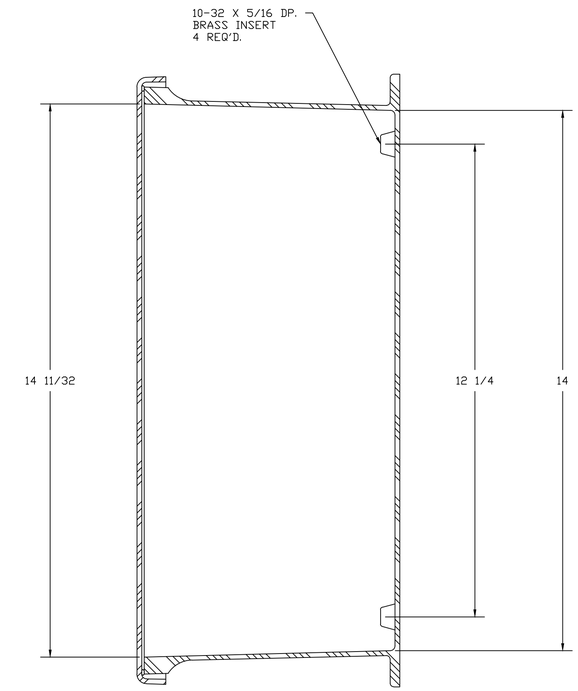


SECTION B–B

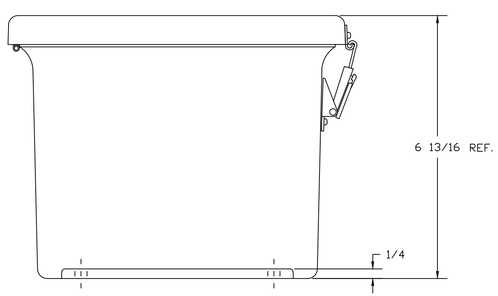


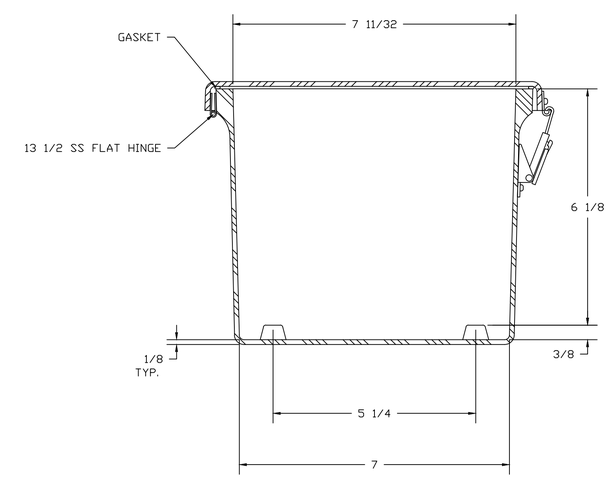


SECTION A–A

NOTES:

| | | | |
|---|---|---|---|
| NEMA 4X | | TOLERANCES UNLESS SPECIFIED | DECIMAL ±.010 / FRACTIONAL ± 1/32 |
| COLOR GLACIER GRAY RR1013 | | | |
| MATERIAL: F.R. POLYESTER FIBERGLASS | DR. BY: SH | DATE: 6/13/91 | STAHLIN ENCLOSURES, DIVISION OF REMCOR INDUSTRIES — BELDING, MICHIGAN 48809 |
| | CHK. BY | DATE | |
| | APD. BY | DATE | CUSTOMER |
| | SCALE: DO NOT SCALE | | PART NAME: ENCLOSURE |
| | | | PART NO.: J1407HLL |
| | | | AutoCAD DWG. FILE: J1407HLL |

| LET. | REVISION RECORD | DATE | BY | CHD. |
|---|---|---|---|---|
| | | | | |