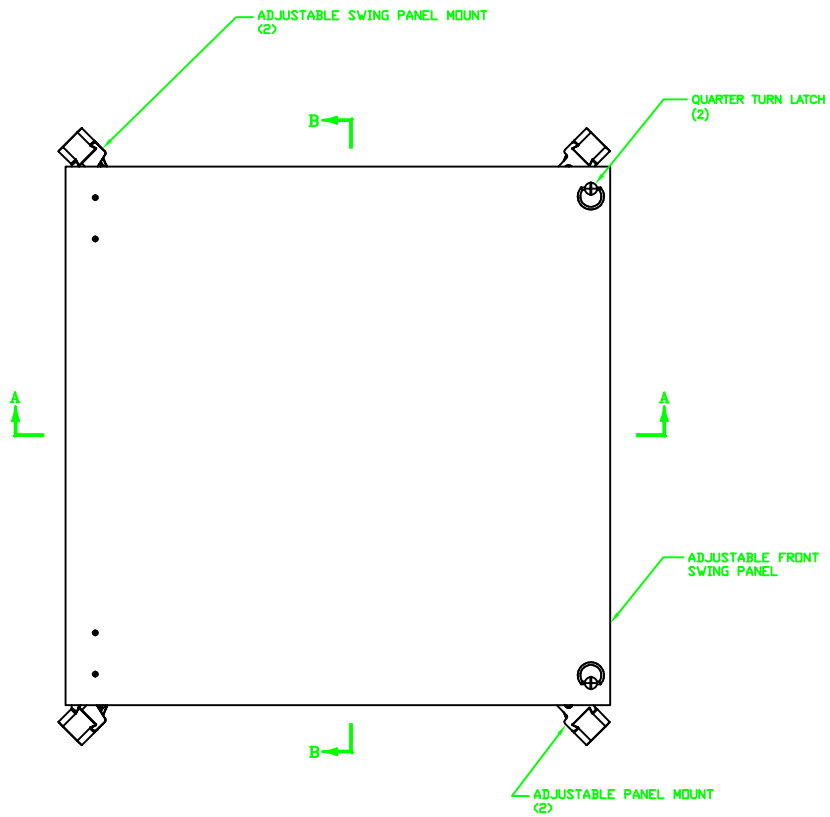

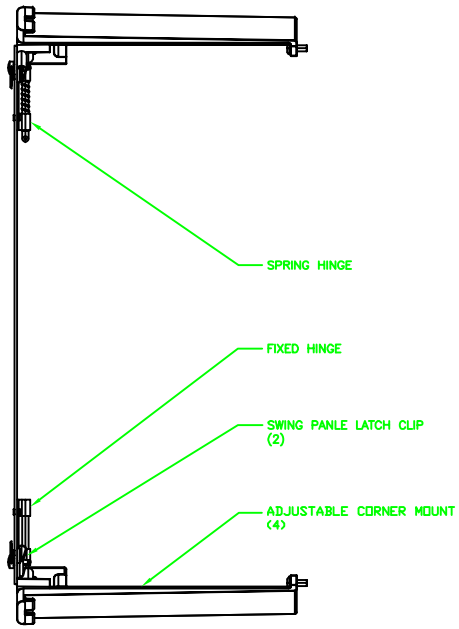

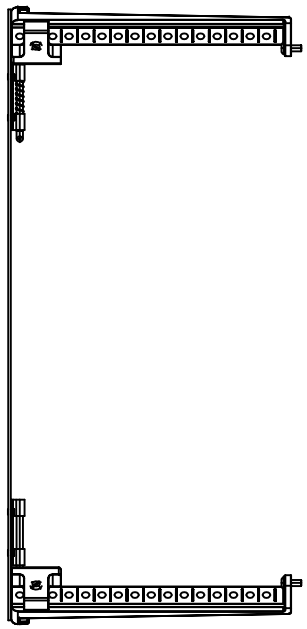

SECTION B–B

SECTION A–A

NOTES:

1. VARIABLE HEIGHT SWING PANEL & ACCESS. KIT.

DRAWING SUBJECT TO CHANGE WITHOUT NOTICE

NOTES:

NEMA 4X

TOLERANCES UNLESS SPECIFIED: DECIMAL ± .010 FRACTIONAL ± 1/32

MATERIAL: F.R. POLYESTER FIBERGLASS

DR. BY: BH DATE: 9/15/20

STAHLIN ENCLOSURES
DIVISION OF HUBBELL INDUSTRIES

BELDING,MICHIGAN 48809

LET.	REVISION RECORD	DATE	BY	CHD.
A.	VEB DRAWING CREATED	9/15/20	BH	

CHK. BY | DATE
APD. BY | DATE

CUSTOMER

AutoCAD DWG. FILE: DS181610SPKA

SCALE: 1:2

PART NAME: SEE NOTE #1

PART NO.: DS181610SPKA