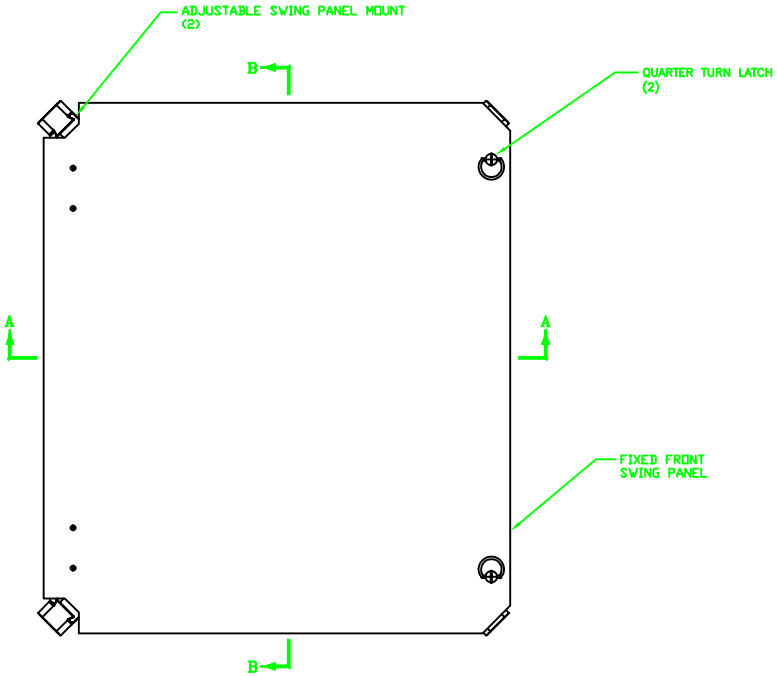

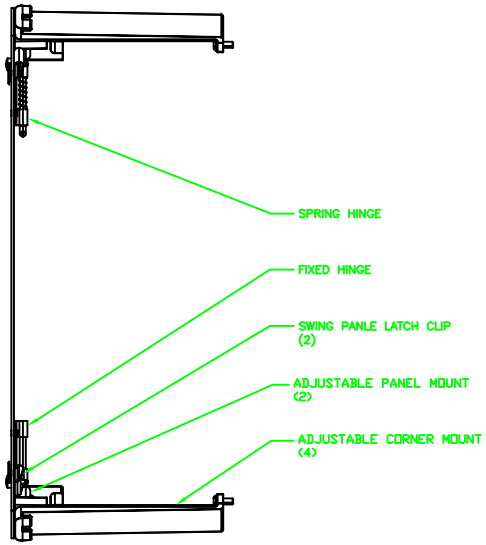

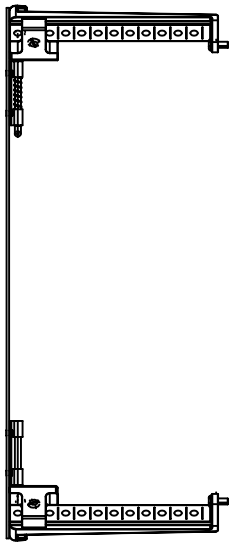

SECTION B–B

SECTION A–A

NOTES:

1. DEAD FRONT SWING PANEL & ACCESS. KIT.

DRAWING SUBJECT TO CHANGE WITHOUT NOTICE

NOTES: NEMA 4X							TOLERANCES UNLESS SPECIFIED	DECIMAL ±.010 / FRACTIONAL ±1/32
MATERIAL F.R. POLYESTER FIBERGLASS					DR. BY BH	DATE 9/15/20	STAHLIN ENCLOSURES DIVISION OF HOFFMAN INDUSTRIES	BELDING,MICHIGAN 48809
LET.	REVISION RECORD	DATE	BY	CHG.	CHK. BY	DATE		
A	WEB DRAWING CREATED	9/15/20	BH		APD. BY	DATE	CUSTOMER	AutoCAD DWG FILE DS161408SPK
					SCALE 1:2		PART NAME SEE NOTE #1	PART NO. DS161408SPK