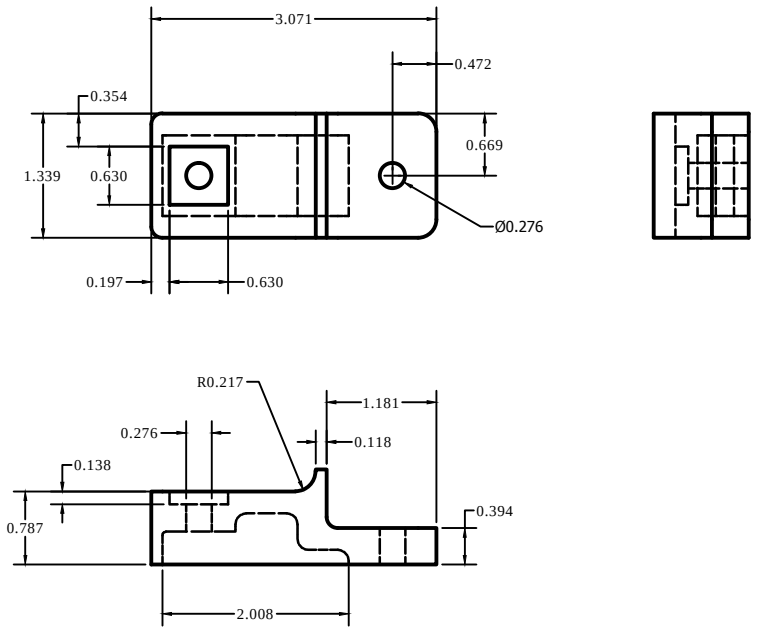

NOTES:

ALL DIMENSIONS ARE INCHES (MILLIMETERS) UNLESS SPECIFIED

TOLERANCES UNLESS SPECIFIED .XX ± 0.13 (3.18) .XXX ± 0.063 (0.794)

MATERIAL

LET.	REVISION RECORD	DATE	BY	CHD.

DR. BY | DATE

CHK. BY | DATE

APD. BY | DATE

SCALE

STAHLIN ENCLOSURES
DIVISION OF ROBROY INDUSTRIES

BELDING, MICHIGAN 48809

CUSTOMER

PART NAME: MOUNTINGFOOT

PART NO.: DLMTGKIT

THIS DRAWING AND THE INFORMATION HEREON ARE OUR PROPERTY AND MAY BE USED BY OTHERS ONLY AS AUTHORIZED BY STAHLIN ENCLOSURES, DIVISION OF ROBROY INDUSTRIES
ALL RIGHTS RESERVED
UNDER THE COPYRIGHT LAWS