INSTALLATION OF QUARTER TURN LATCHES:

1. ONLY CERTIFIED QT ASSEMBLIES SHALL BE INSTALLED
   -VERIFY MARKING ON CAM FOR TORQUE VERIFICATION
2. INSTALL QT LATCH INTO CUTOUT IN COVER
   -VERIFY CORRECT ORIENTATION
3. TORQUE HOUSING NUT TO 70 IN.-LBS. USING TORQUE WRENCH
   -TOLERANCE +/- 5 IN.-LBS.
4. MARK INSIDE OF COVER VERIFYING NUT WAS TORQUED
5. APPLY SILICONE ACROSS THREADS OF HOUSING & NUT
6. VERIFY DIRECTION OF QT LATCH IS CLOCKWISE (CW) FOR LOCKING POSITION
7. ALL QT LATCHES SHALL BE UNLOCKED BEFORE SHIPPING
8. CAM NUT TOLERANCE: 16 - 18 IN.-LBS.

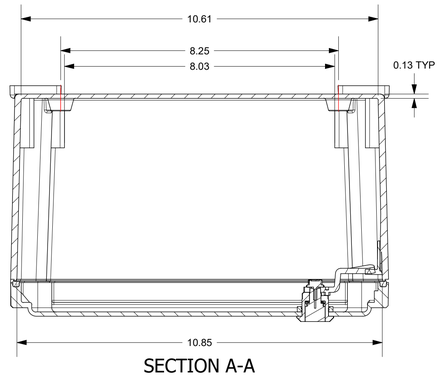

SECTION A-A

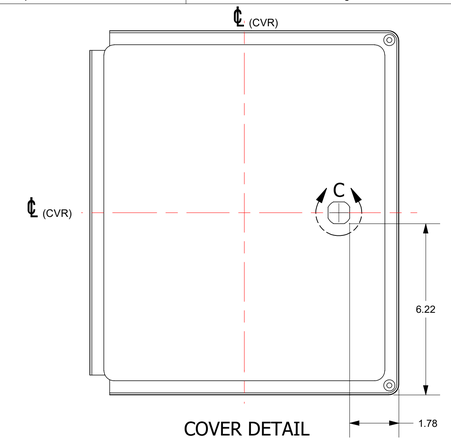

COVER DETAIL

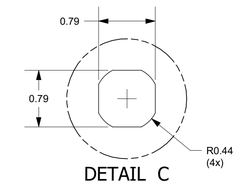

DETAIL C

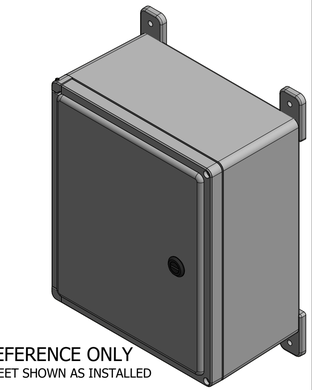

FOR REFERENCE ONLY
MOUNTING FEET SHOWN AS INSTALLED

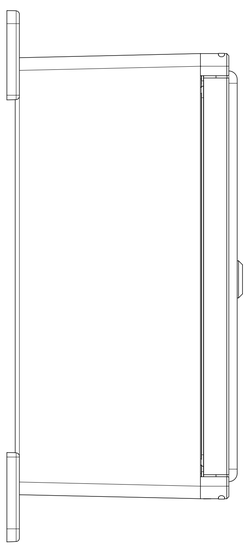

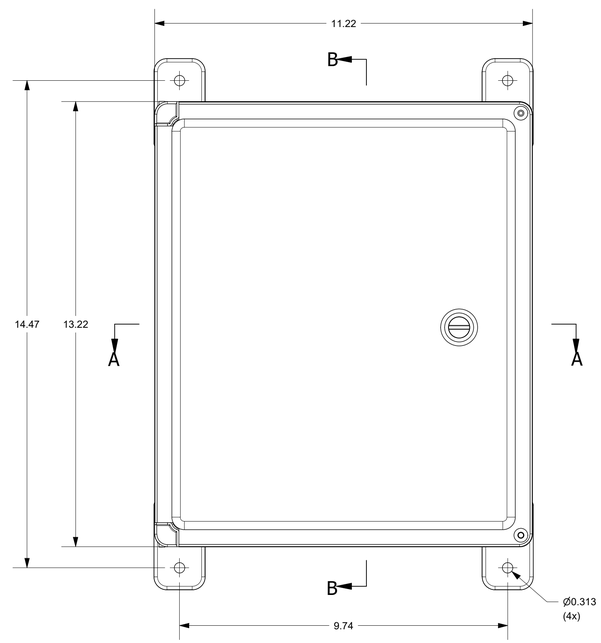

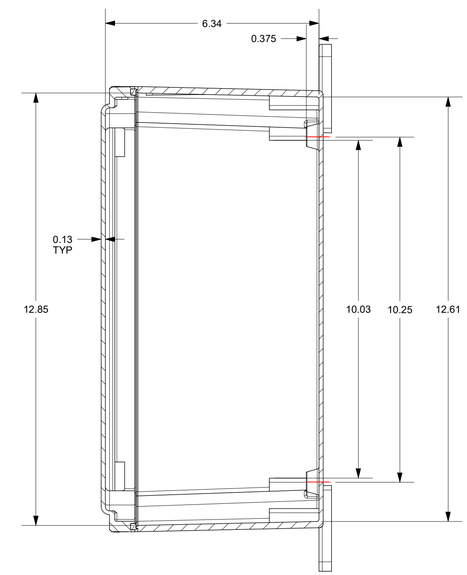

SECTION B-B

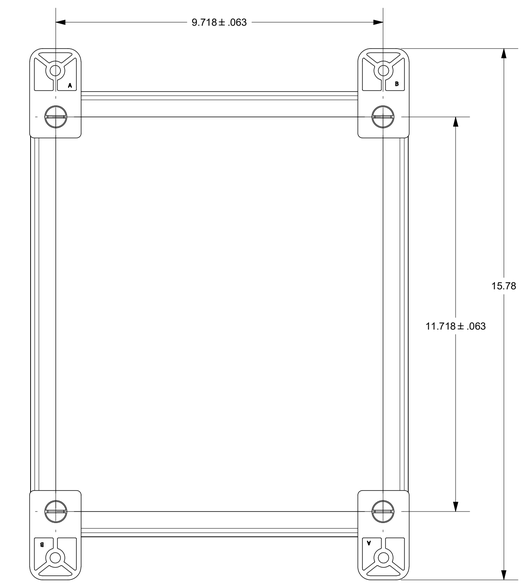

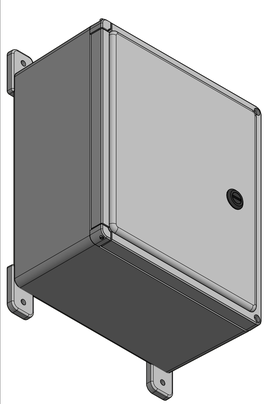

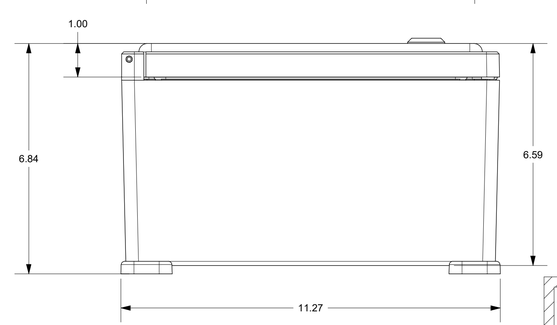

THIS DRAWING IS THE SOLE AND EXCLUSIVE PROPERTY OF ROBROY ENCLOSURES. NO PART OF THIS DRAWING MAY BE REPRODUCED, DISTRIBUTED, OR PUBLICALLY DISPLAYED IN ANY FORM OR BY ANY MEANS WITHOUT THE EXPRESS WRITTEN PERMISSION OF ROBROY ENCLOSURES. ALL RIGHTS RESERVED UNDER THE COPYRIGHT LAWS. COPYRIGHT © 2018 ROBROY ENCLOSURES

SPECIAL REQUIREMENTS

ASSEMBLY:

1. MOUNTING FEET SHOWN AS INSTALLED - FOR REFERENCE ONLY
   -SOLD SEPARATELY
   -CLASSIC SERIES MOUNTING FOOT KIT (FECLMTGFTKIT)
   -INCLUDES (4) 5/16-18 x 1/2 FLAT HEAD SLOTTED SCREWS (RMSC5/16-18X1/2FL)
2. (1) CLASSIC SERIES SCREW PACK (WP4PKBP) SHALL BE PACKAGED LOOSELY INSIDE ENCLOSURE
   HARDWARE INCLUDED:
   -(4) #10-32 x 3/8 PAN HEAD SCREW (RMSC10/32X3/8ZN)
   -(4) #10 WASHER (RMWAS10ZN)
3. CLASSIC SERIES LATCH CATCH (FELATCHCATCHBLK) SHALL BE INSTALLED
   IAW CL-HL WORK INSTRUCTIONS
4. REFERENCE QUARTER TURN LATCH INSTALLATION SPECIFICATION

NEMA 250: TYPE 1, 3, 3S, 3R, 4X, 12 IEC 60529: N/A COLOR: GLACIER GRAY (WPR3013) COLOR STANDARD: PANTONE 428 C	STANDARD P/N: CL1311HL CUSTOMER DWG:	ALL DIMENSIONS ARE IN INCHES UNLESS OTHERWISE SPECIFIED	TOLERANCES UNLESS SPECIFIED .XX ± 0.03 .XXX ± 0.010

MATERIAL: FIBERGLASS REINFORCED POLYESTER (FRP)

REVISION HISTORY

REV	DESCRIPTION	DATE	ENG
-	UPDATED TOLERANCE FOR MOUNTING FOOT LOCATION	12/8/20	BH
-	-	-	-
-	-	-	-
-	-	-	-
-	-	-	-

STAHLIN
A ROBROY ENCLOSURES™ BRAND

Robroy Enclosures
500 Maple Street
Belding, Michigan 48809
Phone: 616-794-0700
Fax: 616-749-3378

DRAWN BY	DATE	CUSTOMER	DWG
ARB	10/17/18		CL1311HL
SCALE		DESCRIPTION	PART NUMBER
DO NOT SCALE		STANDARD ENCLOSURE	FECL1311HL